Surface Mount

Power Splitter/Combiner

JS4PS-1W+
JS4PS-1W

4 Way-0° 50Ω 5 to 1000 MHz

CASE STYLE: BK377
PRICE: $14.95 ea. QTY. (1-9)

+ RoHS compliant in accordance with EU Directive (2002/95/EC)

The +Suffix identifies RoHS Compliance. See our web site for RoHS Compliance methodologies and qualifications.

Maximum Ratings

Operating Temperature	-40°C to 85°C
Storage Temperature	-55°C to 100°C
Power Input (as a splitter)	0.5W max.
Internal Dissipation	0.375W max.

Permanent damage may occur if any of these limits are exceeded.

Pin Connections

SUM PORT	10
PORT 1	2
PORT 2	3
PORT 3	5
PORT 4	6
GROUND	1,4,7,8,9,11,12,13,14

Features

- wideband frequency, 5 to 1000 MHz
- good input matching, VSWR 1.2 typ.
- good output matching, VSWR 1.1 typ.
- shielded case
- aqueous washable
- protected under US patent 6,963,255

Applications

- VHF/UHF-TV receivers/transmitters
- cellular

Electrical Specifications

FREQ. RANGE (MHz)	ISOLATION (dB)						INSERTION LOSS (dB) ABOVE 6.0 dB						PHASE UNBALANCE (Degrees)			AMPLITUDE UNBALANCE (dB)		
	L		M		U		L		M		U		L	M	U	L	M	U
f_L-f_U	Typ.	Min.	Typ.	Min.	Typ.	Min.	Typ.	Max.	Typ.	Max.	Typ.	Max.	Max.	Max.	Max.	Max.	Max.	Max.
5-1000	29	20	26	18	20	15	0.3	1.1	0.8	1.5	1.5	2.4	5	5	12	0.8	0.7	0.7

L = low range [f_L to 10 f_L] M = mid range [10 f_L to f_U/2] U= upper range [f_U/2 to f_U]

Outline Drawing

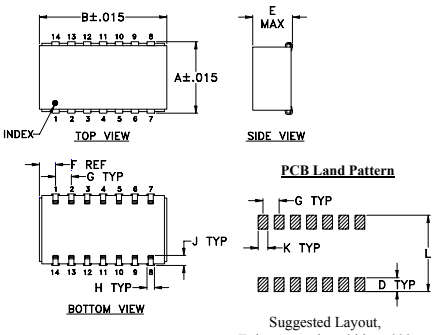

Suggested Layout, Tolerance to be within ±.002

Outline Dimensions (inch / mm)

A	B	C	D	E	F
.505	.800	--	.100	.250	.100
12.83	20.32	--	2.54	6.35	2.54

G	H	J	K	L	wt
.100	.047	.065	.065	.525	grams
2.54	1.19	1.651	1.65	13.34	3.0

Demo Board MCL P/N: TB-133
Suggested PCB Layout (PL-091)

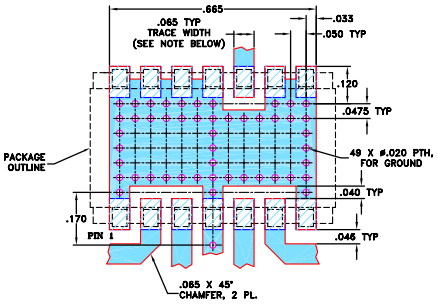

NOTE: TRACE WIDTH IS SHOWN FOR FR4 WITH DIELECTRIC THICKNESS 0.030" ± .002", COPPER: 1/2 OZ. EACH SIDE. FOR OTHER MATERIALS TRACE WIDTH MAY NEED TO BE MODIFIED.

DENOTES PCB COPPER LAYOUT

DENOTES COPPER LAND PATTERN FREE OF SOLDER MASK

Typical Performance Data

Freq. (MHz)	Total Loss[1] (dB)				Amp. Unbal. (dB)	Isolation (dB)			Phase Unbal. (deg.)	VSWR S	VSWR 1	VSWR 2	VSWR 3	VSWR 4
	S-1	S-2	S-3	S-4		1-2	2-3	3-4						
5.00	6.56	6.36	6.41	6.21	0.36	30.36	37.82	29.37	0.69	1.05	1.35	1.29	1.32	1.26
10.00	6.53	6.34	6.39	6.20	0.34	32.42	39.54	31.18	0.39	1.04	1.31	1.25	1.28	1.23
30.00	6.57	6.38	6.42	6.24	0.33	32.75	39.14	31.56	0.18	1.05	1.29	1.24	1.26	1.21
50.00	6.59	6.40	6.44	6.26	0.33	31.59	38.16	30.74	0.23	1.06	1.28	1.23	1.25	1.21
70.00	6.61	6.42	6.46	6.28	0.33	30.35	37.24	29.84	0.28	1.07	1.28	1.23	1.25	1.21
100.00	6.64	6.44	6.49	6.30	0.34	28.75	36.00	28.60	0.48	1.09	1.27	1.22	1.25	1.20
200.00	6.73	6.54	6.59	6.40	0.33	25.05	32.97	25.41	0.99	1.14	1.25	1.20	1.23	1.19
300.00	6.80	6.62	6.66	6.48	0.32	23.04	31.34	23.48	1.43	1.16	1.22	1.18	1.21	1.17
400.00	6.88	6.70	6.74	6.56	0.32	22.03	30.78	22.32	1.93	1.15	1.20	1.17	1.21	1.16
500.00	6.94	6.77	6.83	6.64	0.31	21.60	30.97	21.54	2.25	1.13	1.17	1.16	1.18	1.15
600.00	7.03	6.88	6.91	6.74	0.29	21.44	31.71	20.88	2.64	1.09	1.15	1.16	1.16	1.15
700.00	7.12	6.99	7.02	6.85	0.26	21.20	32.66	20.14	2.87	1.07	1.14	1.17	1.15	1.16
800.00	7.23	7.13	7.16	7.00	0.24	20.60	32.77	19.28	3.13	1.12	1.13	1.18	1.14	1.16
900.00	7.39	7.33	7.33	7.19	0.20	19.68	31.58	18.40	3.28	1.18	1.12	1.19	1.13	1.16
1000.00	7.56	7.56	7.51	7.39	0.17	18.66	29.87	17.60	3.43	1.24	1.10	1.19	1.10	1.15

1. Total Loss = Insertion Loss + 6dB splitter loss.

JS4PS-1W TOTAL LOSS

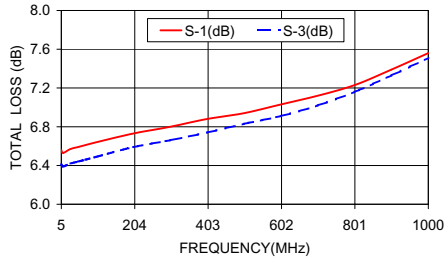

JS4PS-1W ISOLATION

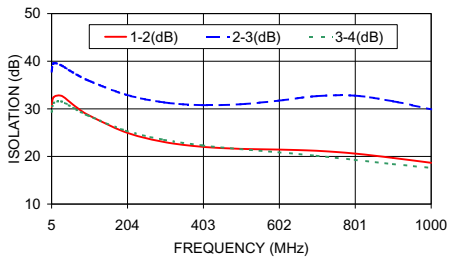

JS4PS-1W VSWR

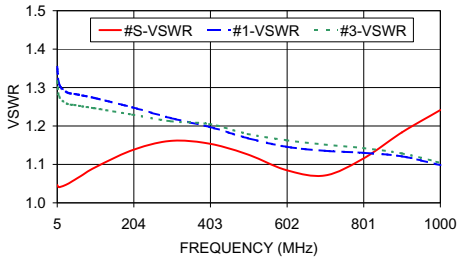

electrical schematic

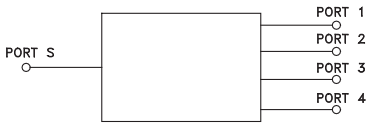

Notes: 1. Performance and quality attributes and conditions not expressly stated in this specification sheet are intended to be excluded and do not form a part of this specification sheet. **2.** Electrical specifications and performance data contained herein are based on Mini-Circuit's applicable established test performance criteria and measurement instructions. **3.** The parts covered by this specification sheet are subject to Mini-Circuits standard limited warranty and terms and conditions (collectively, "Standard Terms"); Purchasers of this part are entitled to the rights and benefits contained therein. For a full statement of the Standard Terms and the exclusive rights and remedies thereunder, please visit Mini-Circuits' website at www.minicircuits.com/MCLStore/terms.jsp.

REV. D
M127604
ED-8390/2
JS4PS-1W
WZ/TD/CP/AM
100617